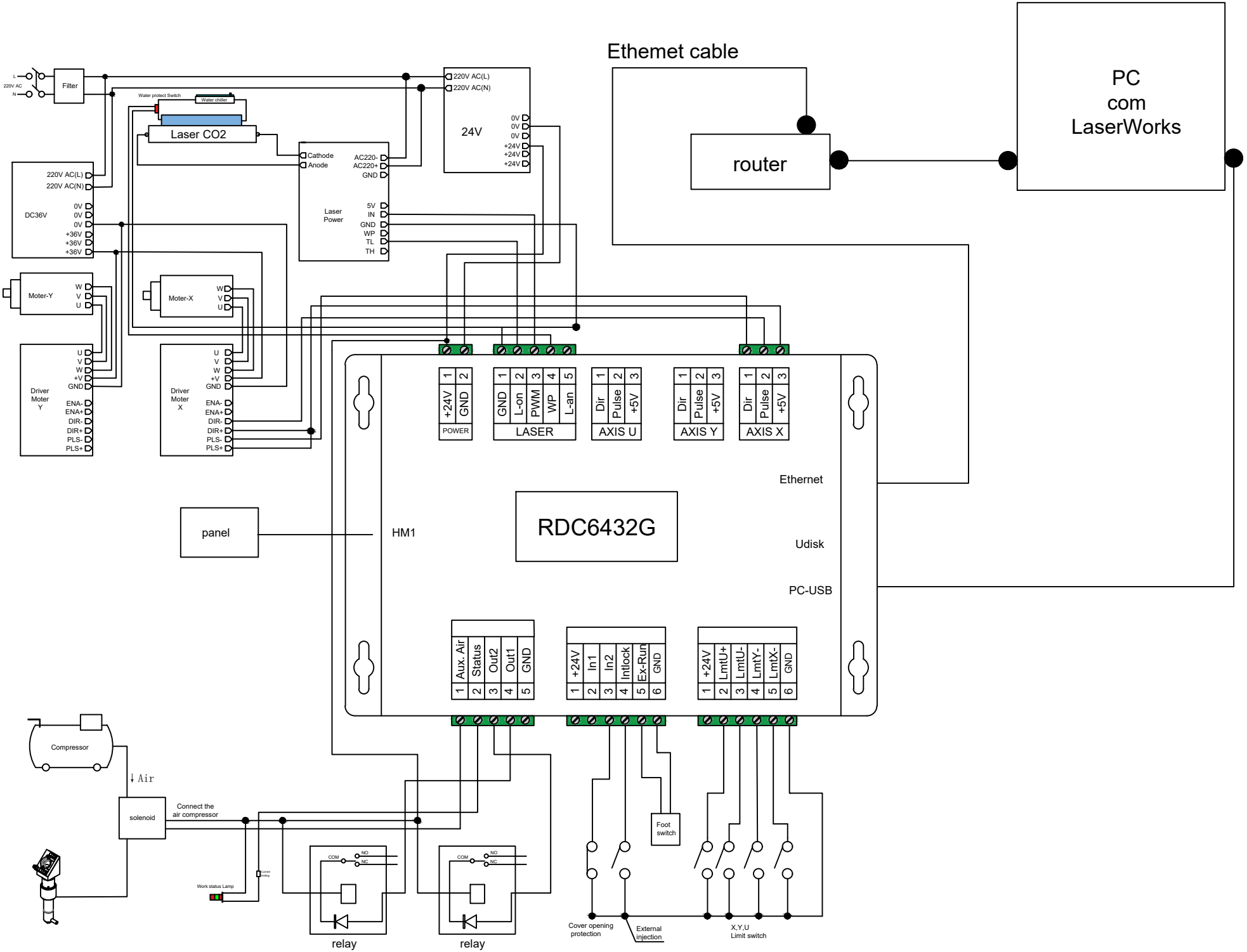
Ethemet cable
PC
com
LaserWorks
router
Filter
220V AC
L
N
Water protect Switch
Water chiller
Laser CO2
220V AC(L)
220V AC(N)
24V
0V
0V
0V
+24V
+24V
+24V
Cathode
Anode
AC220-
AC220+
GND
Laser
Power
5V
IN
GND
WP
TL
TH
DC36V
220V AC(L)
220V AC(N)
0V
0V
0V
+36V
+36V
+36V
Moter-Y
W
V
U
Moter-X
W
V
U
Driver
Moter
Y
U
V
W
+V
GND
ENA-
ENA+
DIR-
DIR+
PLS-
PLS+
Driver
Moter
X
U
V
W
+V
GND
ENA-
ENA+
DIR-
DIR+
PLS-
PLS+
1 2
+24V GND
POWER
1 2 3 4 5
GND L-on PWM WP L-an
LASER
1 2 3
Dir Pulse +5V
AXIS U
1 2 3
Dir Pulse +5V
AXIS Y
1 2 3
Dir Pulse +5V
AXIS X
Ethernet
panel
HM1
RDC6432G
Udisk
PC-USB
1 2 3 4 5
Aux. Air Status Out2 Out1 GND
1 2 3 4 5 6
+24V In1 In2 Intlock Ex-Run GND
1 2 3 4 5 6
+24V LmtU+ LmtU- LmtY- LmtX- GND
Compressor
Air
solenoid
Connect the
air compressor
Work status Lamp
Current
Analog
COM
NO
NC
relay
COM
NO
NC
relay
Foot
switch
Cover opening
protection
External
injection
X,Y,U
Limit switch