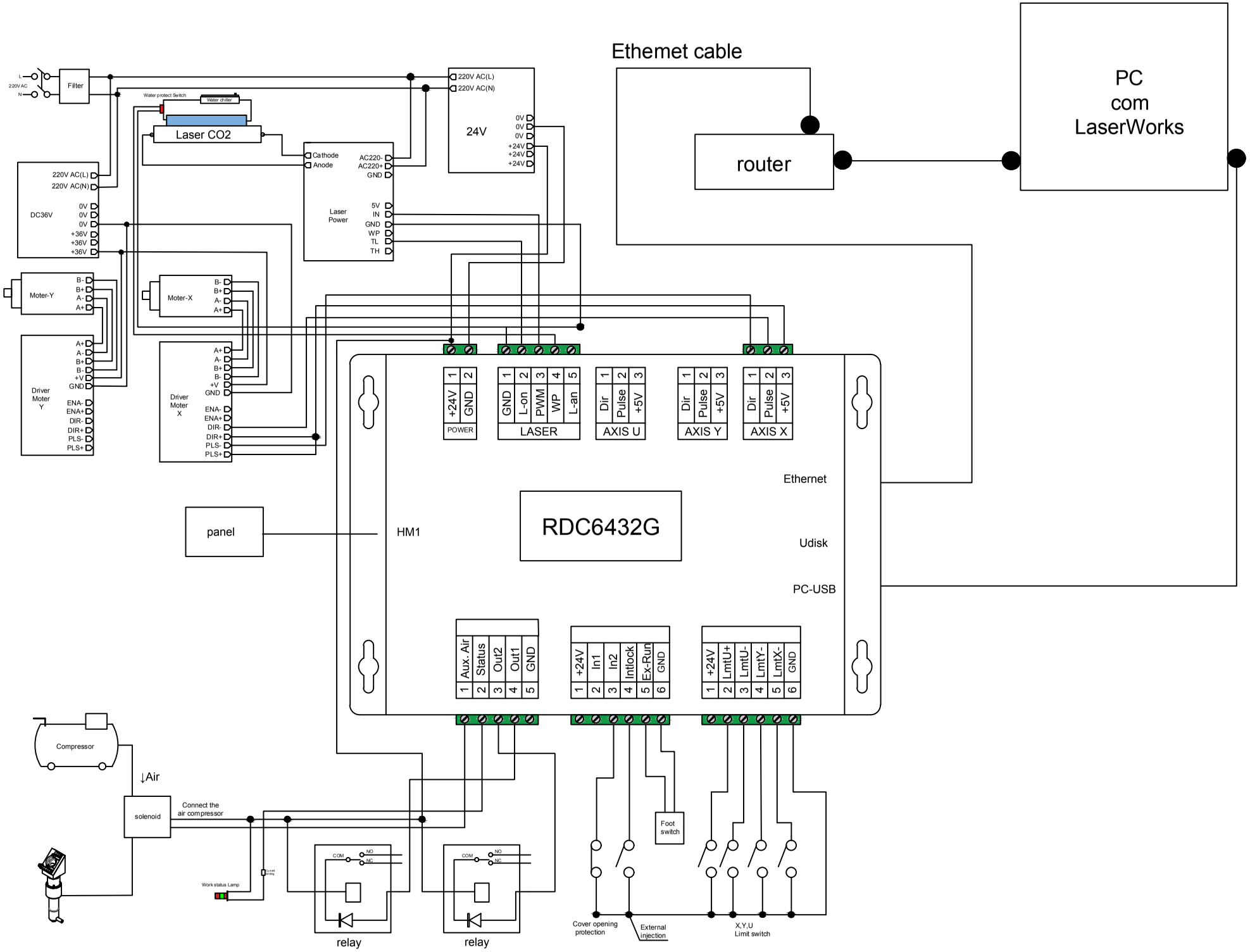
Ethemet cable
PC
com
LaserWorks
router
L
220V AC
N
Filter
Water protect Switch
Water chiller
Laser CO2
220V AC(L)
220V AC(N)
24V
0V
0V
0V
+24V
+24V
+24V
Cathode
Anode
AC220-
AC220+
GND
Laser
Power
5V
IN
GND
WP
TL
TH
220V AC(L)
220V AC(N)
DC36V
0V
0V
0V
+36V
+36V
+36V
Moter-Y
B-
B+
A-
A+
Moter-X
B-
B+
A-
A+
Driver
Moter
Y
A+
A-
B+
B-
+V
GND
ENA-
ENA+
DIR-
DIR+
PLS-
PLS+
Driver
Moter
X
A+
A-
B+
B-
+V
GND
ENA-
ENA+
DIR-
DIR+
PLS-
PLS+
1 +24V
2 GND
POWER
1 GND
2 L-on
3 PWM
4 WP
5 L-an
LASER
1 Dir
2 Pulse
3 +5V
AXIS U
1 Dir
2 Pulse
3 +5V
AXIS Y
1 Dir
2 Pulse
3 +5V
AXIS X
Ethernet
panel
HM1
RDC6432G
Udisk
PC-USB
1 Aux. Air
2 Status
3 Out2
4 Out1
5 GND
1 +24V
2 In1
3 In2
4 Intlock
5 Ex-Run
6 GND
1 +24V
2 LmtU+
3 LmtU-
4 LmtY-
5 LmtX-
6 GND
Compressor
↓Air
solenoid
Connect the
air compressor
Work status Lamp
COM
NO
NC
relay
COM
NO
NC
relay
Foot
switch
Cover opening
protection
External
injection
X,Y,U
Limit switch